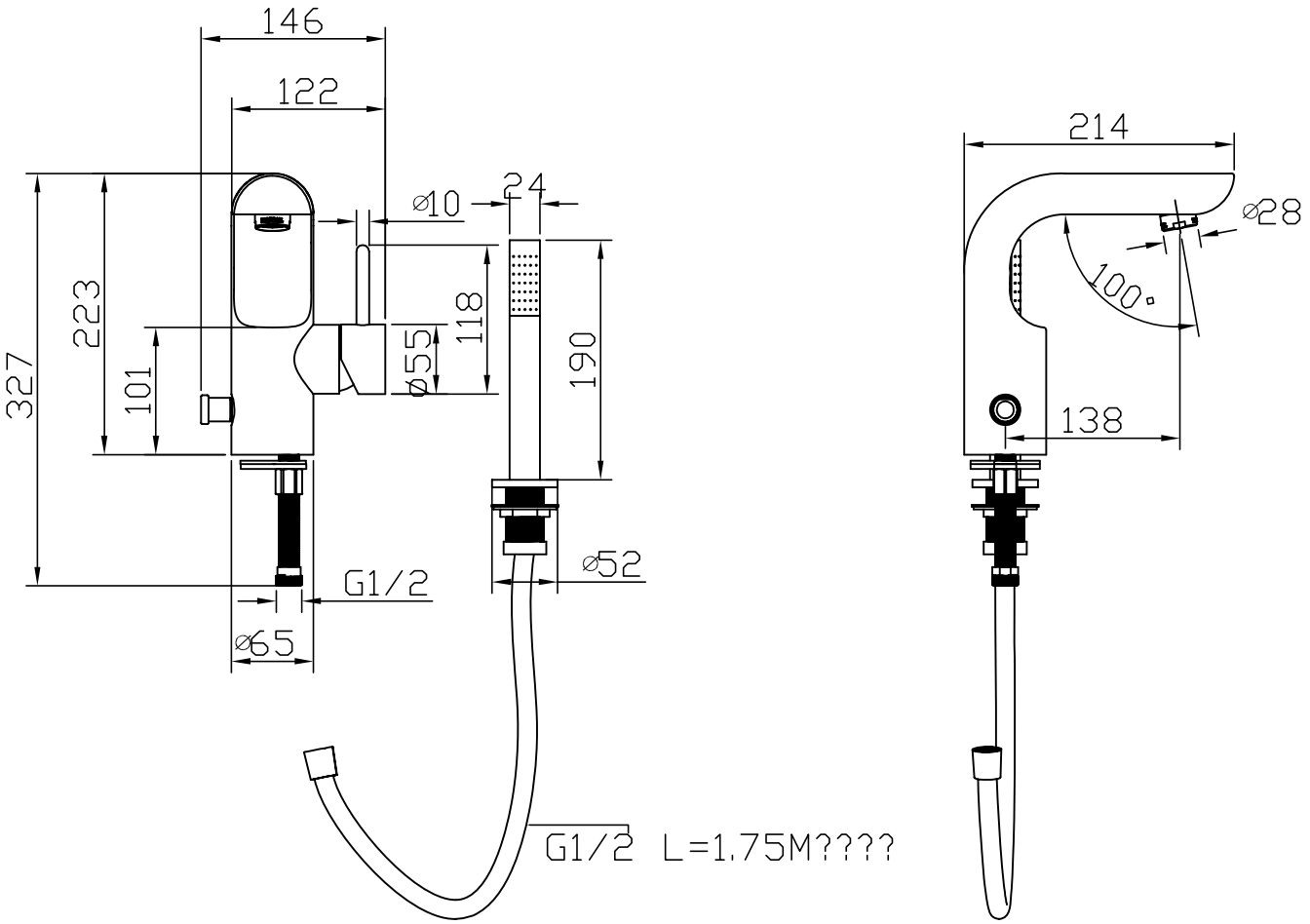

EL410DC - ELITE BATH SHOWER MONOBLOC Deck Mounted