crosswater

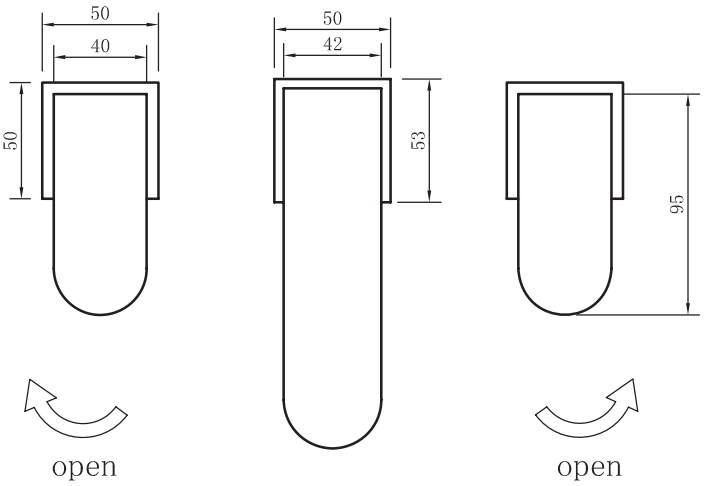

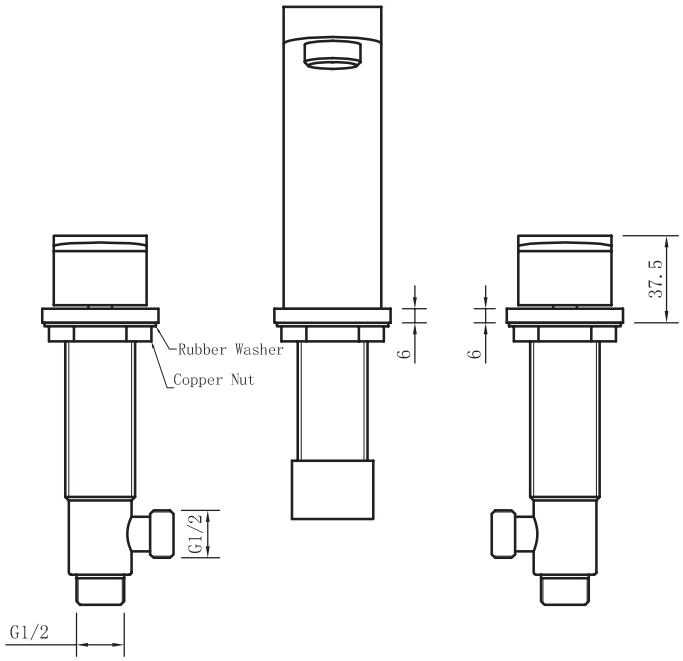

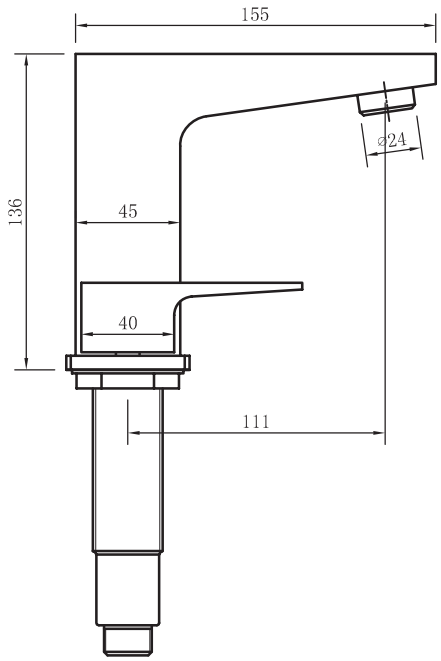

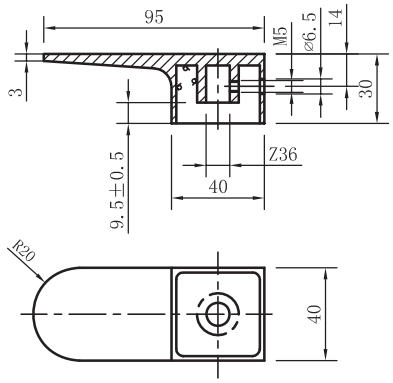

MO130DNC - MODEST BASIN 3 HOLE SET Deck Mounted