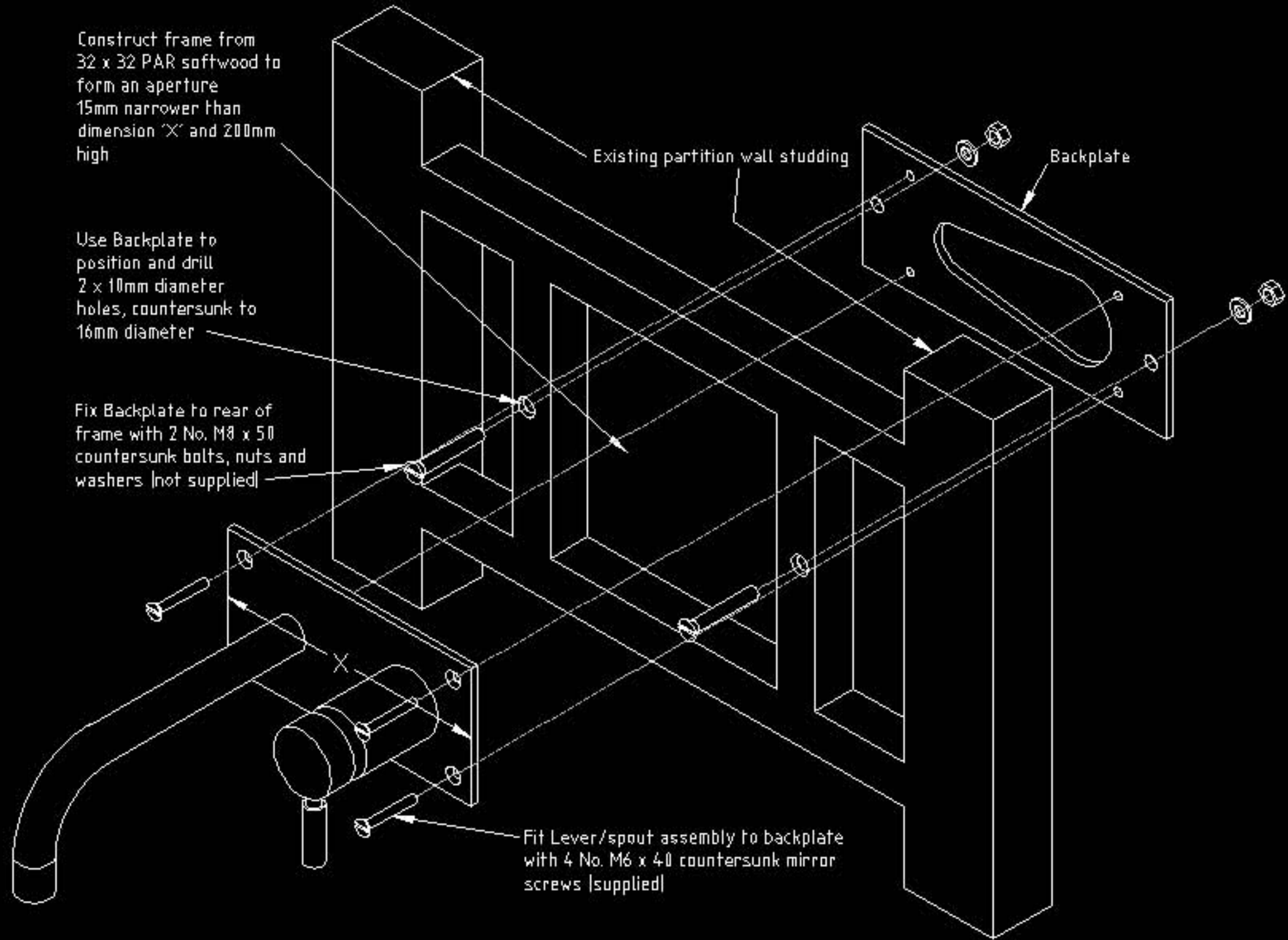

Note: Size and style of plate may vary depending on model chosen